WiFi 802.11 b/g
Wireless LAN Module

Features

- FCC / CE/ IC certified 2.4GHz IEEE 802.11b/g trans-ceiver
- Small form factor: 39.6 x 25.3 x 9.9 mm
- Configurable transmit power: 0dBm to 10 dBm
- U.FL Antenna connector
- Ultra-low power - 4uA sleep, 38mA Rx, 120 mA Tx at 0dBm
- High throughput - 921Kbps TX, 500Kbps RX data rate with TCP/IP and WPA2 over UART
- 8 Mbit flash memory and 128 KB RAM
- 10 general purpose digital I/O
- 8 analog sensor interfaces
- Real-time clock for wakeup and time stamping
- Accepts 3.3V regulated power supply or 3V battery
- Supports Adhoc and infrastructure networks
- On board complete TCP/IP networking stack
- Environmentally friendly- RoHS compliant.

Applications

- Remote Monitoring
- Industrial sensors and controls
- Telemetry
- Home Automation

Description

The DW-RN171-XU module is a standalone complete TCP/IP wireless networking module. Due to its small form factor and extremely low power consumption, the DW-RN171-XU is perfect for mobile wireless applications such as asset monitoring, sensors and portable battery operated devices. It incorporates a 2.4GHz radio, 32-bit SPARC processor, TCP/IP stack, real-time clock, crypto accelerator, power management and analog sensor interfaces. This module is preloaded with firmware to simplify integration and minimizes development of your application. In the simplest configuration the hardware only requires four connections (PWR, TX, RX and GND) to create a wireless data connection. Additionally, the analog sensor inputs can be used to interface a variety of sensors such as temperature, audio, motion and acceleration. The ability to go into deep sleep mode and automatically scan and associate to an AP when awake makes the DW-RN171-XU suitable for roaming applications. The DW-RN171-XU also includes a built in HTML client to automatically post serial uart data or sensor data to a web server.

Block Diagram

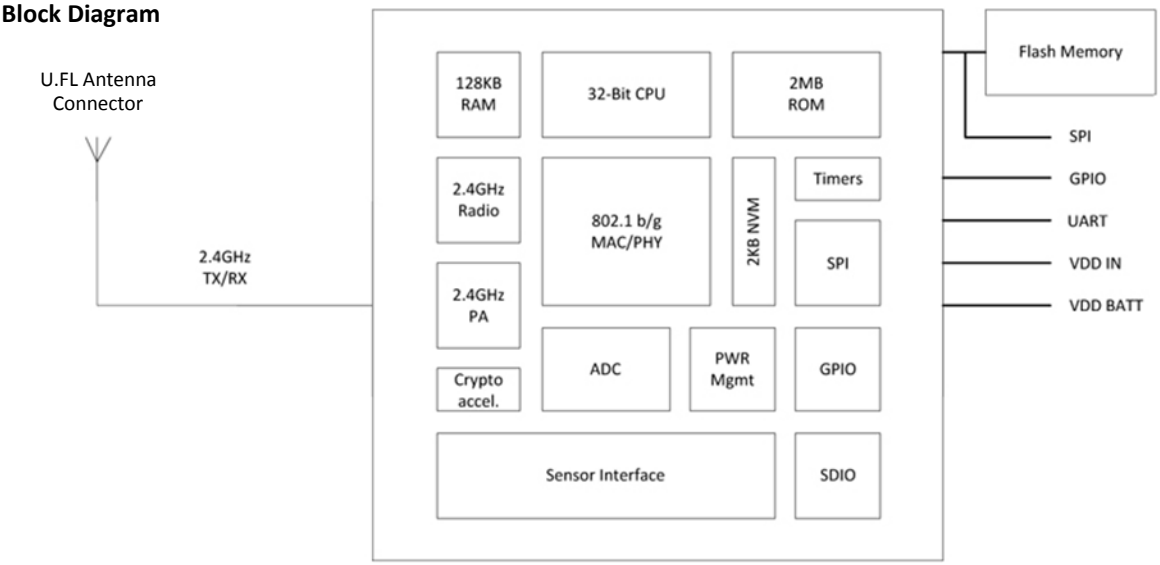

Printed in Germany by datasphere wireless - Systems & Solutions GmbH . All rights reserved.
www.datasphere.eu - support@datasphere.eu

Overview

- Host Data Rate up to 921 Kbps TX, 500 Kbps RX for UART, up to 2Mbps over SPI slave
- Intelligent, built-in power management with programmable wakeup
- Real time clock for time stamping, auto-sleep and auto-wakeup
- Configuration using simple ASCII commands
- Software controlled transmit power (0dBm to 10dBm) for ultra low power applications
- Memory 128 KB RAM, 2MB ROM, 2 KB battery-backed memory, 8 Mbit Flash.
- Secure WiFi authentication WEP-128, WPA-PSK (TKIP), WPA2-PSK (AES)
- Built in networking applications DHCP, UDP, DNS, ARP, ICMP, TCP, HTML client
- 802.11 power save and roaming functions
- Castellated pads for reliable soldering

Environmental Conditions

Parameter	DW-RN171-XU
Temperature Range (Operating)	-40 °C ~ +85 °C
Temperature Range (Storage)	-40°C ~ +85 °C
Relative Humidity (Operating)	≤90%
Relative Humidity (Storage)	≤90%

Electrical Characteristics (Provisional)

Supply Voltage		Min	Typ.	Max.	Unit
Supply Voltage (VBATT option)		3.0	3.3	3.7	VDC
Digital Input					
Input logic HIGH VIH		2.3V			VDC
Input logic LOW VIL				1.0V	VDC
Digital Output drive					
PIO 4,5,6,7,8			24		mA
PIO 9,10,11,12,13			8		mA
Power consumption					
Sleep			4		uA
Standby (doze)		-	15	-	mA
Connected (idle, RX)			40		mA
Connected (TX)*	0dBm		120		mA
	12dBm		190		mA

***The transmit power can be controlled via firmware**

Printed in Germany by datasphere wireless - Systems & Solutions GmbH . All rights reserved.
www.datasphere.eu - support@datasphere.eu

Analog Sensor Inputs

Parameter	Value
Sense 0,1,2,3 wakeup detect threshold	500mV
AD sense 0-7 measurement range	0-400mV **(Do not exceed 1.2V DC)**
Resolution	14 bits = 12uV
Accuracy	5% un-calibrated, .01% calibrated
Minimum conversion time	35us (5kHz over Wi-Fi)
Sensor Power (pin 33) output resistance 3.3V	10 ohms, max current = 50mA

Radio Characteristics

Parameter	Specifications
Frequency	2402 ~ 2480MHz
Modulation	802.11b compatibility : DSSS(CCK-11, CCK-5.5, DQPSK-2, DBPSK-
Channel intervals	5MHz
Channels	1 - 14
Transmission rate (over the air)	1 – 11Mbps for 802.11b / 6 – 54Mbps for 802.11g
Receive sensitivity	-83dBm typ.
Output level (Class1)	-2dBm to +12dBm (configurable via software)

Transmit Power

Output Power	802.11 b (2Mbps) Current in mA*	802.11 g (24Mbps) Current in mA*
0	120	135
2	130	150
4	170	190
6	175	200
8	180	210
10	185	225
12	190	240

*** Measured at 3.3VDC VCC. The power consumption is the average power, active during actual power consumption**

Printed in Germany by datasphere wireless - Systems & Solutions GmbH . All rights reserved.
www.datasphere.eu - support@datasphere.eu

Pin Description

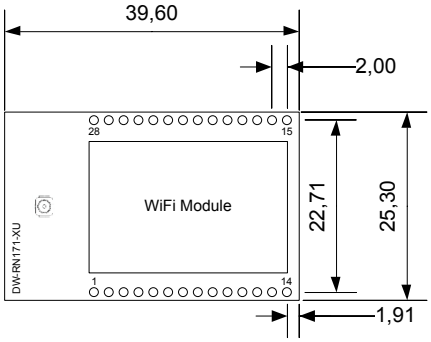

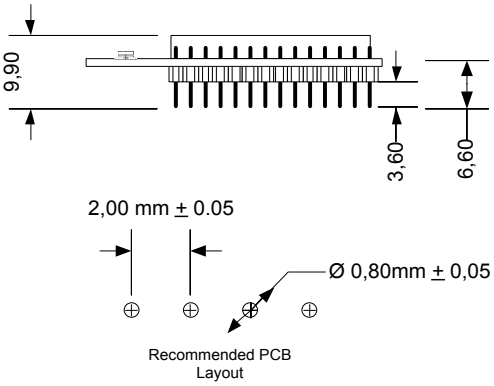

Pad No.	Signal Name	Description	Optional Function	Direction
1	SENSOR 0	Sensor Interface, Analog input to module, **1.2V tolerant**		INPUT
2	SENSOR 1	Sensor Interface, Analog input to module, **1.2V tolerant**		INPUT
3	SENSOR 2	Sensor Interface, Analog input to module, **1.2V tolerant**		INPUT
4	SENSOR 3	Sensor Interface, Analog input to module, **1.2V tolerant**		INPUT
5	SENSOR POWER	Output voltage from module, 3.3V Max		
6	VDD_3.3V	3.3V Power Supply		
7	SENSOR 4	Sensor Interface, Analog input to module, **1.2V tolerant**		INPUT
8	SENSOR 5	Sensor Interface, Analog input to module, **1.2V tolerant**		INPUT
9	SENSOR 6	Sensor Interface, Analog input to module, **1.2V tolerant**		INPUT
10	SENSOR 7	Sensor Interface, Analog input to module, **1.2V tolerant**		INPUT
11	RESET	**Optional** Module Reset Signal (active low), 100k Pull up, apply pulse of at least 160us, 3.3V Tol.		INPUT
12	FORCE_AWAKE	**Optional** Module Awake Signal (active high), 100k pull down, apply pulse of at least 260us, 3.3V Tol.		INPUT
13	GND	Ground		
14	GND	Ground		
15	GPIO 14	GPIO, 8mA drive, 3.3V tolerant		INPUT/OUTPUT
16	GPIO 13	UART RTS		INPUT/OUTPUT
17	GPIO 12	UART CTS		INPUT/OUTPUT
18	GPIO 11	UART RX		INPUT/OUTPUT

Printed in Germany by datasphere wireless - Systems & Solutions GmbH . All rights reserved.
www.datasphere.eu - support@datasphere.eu

Pin Description

Pad No.	Signal Name	Description	Optional Function	Direction
19	GPIO 10	UART TX		INPUT/OUTPUT
20	GPIO 9	Enable Adhoc mode, Restore factory defaults, 8mA drive, 3.3V tolerant		INPUT/OUTPUT
21	GPIO 8	GPIO, 24mA drive, 3.3V tolerant		INPUT/OUTPUT
22	GPIO 7	GPIO, 24mA drive, 3.3V tolerant		INPUT/OUTPUT
23	GPIO 6	GPIO, 24mA drive, 3.3V tolerant, Connection STATUS on Roving Firmware	Association to AP status	INPUT/OUTPUT
24	GPIO 5	GPIO, 24mA drive, 3.3V tolerant,	Data Tx/Rx status	INPUT/OUTPUT
25	GPIO 4	GPIO, 24mA drive, 3.3V tolerant	Connected over TCP status	INPUT/OUTPUT
26	GPIO 3	GPIO, 8mA drive, 3.3V tolerant		INPUT/OUTPUT
27	GPIO 2	GPIO, 8mA drive, 3.3V tolerant		INPUT/OUTPUT
28	GPIO 1	GPIO, 8mA drive, 3.3V tolerant		INPUT/OUTPUT

NOTE #1: Signals marked as INPUT are input to the RN-171 module. Signals marked as OUTPUT are output from the module

NOTE #2: Any of the sensors 0-3 can be used to wake the module. The sensor pins are 1.2V tolerant. DO NOT apply 3.3V on these pins. DO NOT apply 3.3V on any of sensor pins.

NOTE #3: When sensor pins are used as sensor inputs, they saturate at 400mV. Sensor pins will accept input voltages up to 1.2V but will saturate at 400mV. DO NOT apply 3.3V on any of sensor pins.

Printed in Germany by datasphere wireless - Systems & Solutions GmbH . All rights reserved.

Using Batteries

The DW-RN171-XU module does not have a Boost Regulator circuit. This makes the choice of batteries absolutely critical because if the battery voltage drops below 3V, the module performance will start to degrade.. One possible battery of choice is the ER14505 3.6V battery. This battery is known to have a long battery life. If this battery is used to power the module, it is recommended that you use a 1000uF to 3000uF bypass capacitor as the ER14505 battery has high output impedance.

Boost Regulator

The DW-RN171-XU does not have a boost regulator on board. A recommended circuit for the boost regulator is shown below.

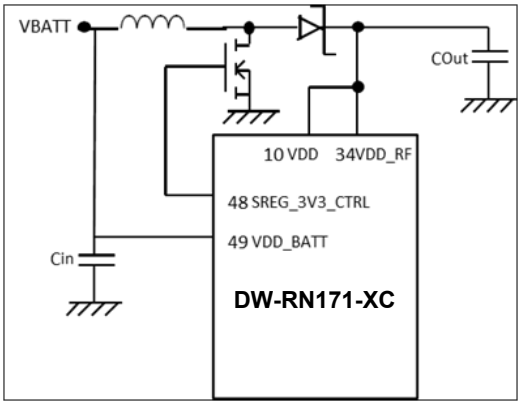

Designs that include the boost regulator will provide good supply to the flash even when the battery voltage drops close to 1.8V.

If a board containing DW-RN171-XU does not include the boost regulator, it **SHOULD** include a 2.7V undervoltage reset circuit to prevent the module from accessing flash when supply voltage falls below 2.7V.

All supported flash chips are rated for minimum VDD of 2.7V.

Recommended values of the parts for the Boost Regulator circuit are:

Designator	Description	Value	Manufacturer	Manufacturer PN	Vendor	Vendor PN
D	Diode Schottky 1A 20V SMA	SS12	Micro Commercial Co	SS12-TP	DigiKey	SS12-TPCT-ND
L	Inductor 1.0uH 30% SMD	1uH	Taiyo Yuden	NR3015T1R0N	DigiKey	587-1647-1-ND
Q	MOSFET N-CH 20V 5.9 A	DMN2050L	Diodes Inc.	DMN2050L-7	DigiKey	DMN2050LDICT-ND

It is recommended to use a low voltage detector circuit such as XC61 from Torex tied to the RESET pin of the DW-RN171-XU module to protect from low voltage.

Powering from a 3.3V Regulated Source:

Apply 3.3V regulated power to pin 6.

Printed in Germany by datasphere wireless - Systems & Solutions GmbH . All rights reserved.

Ordering Information

Part Number	Description
DW-RN171-XU	Industrial Temperature (- 40 to + 85 C) with RF pad for external antenna
DW-RN171-XU-Kit	Development board for DW-RN171-XU module containing RS-232 and TTL UART hardware interface, status LEDs, power regulator, sensor connections
For other configurations, contact datasphere wireless directly.	

Visit http://www.datasphere.eu for current pricing and a list of distributors carrying our products.

Copyright © 2012 datasphere wireless. All rights reserved.

datasphere wireless reserves the right to make corrections, modifications, and other changes to its products, documentation and services at any time. Customers should obtain the latest relevant information before placing orders and should verify that such information is current and complete.

datasphere wireless assumes no liability for applications assistance or customer product design. Customers are responsible for their products and applications using datasphere wireless components. To minimize the risks associated with customer products and applications, customers should provide adequate design and operating safeguards.

datasphere wireless products are not authorized for use in safety-critical applications (such as life support) where a failure of the datasphere wireless product would reasonably be expected to cause severe personal injury or death, unless officers of the parties have executed an agreement specifically governing such use.

All other trademarks are property of their respective owners.